Cambridge Assessment International Education

Cambridge International AS & A Level

PHYSICS **9702/12**

Paper 1 Multiple Choice **May/June 2023**

1 hour 15 minutes

You must answer on the multiple choice answer sheet.

You will need: Multiple choice answer sheet
Soft clean eraser
Soft pencil (type B or HB is recommended)

INSTRUCTIONS

- There are **forty** questions on this paper. Answer **all** questions.
- For each question there are four possible answers **A**, **B**, **C** and **D**. Choose the **one** you consider correct and record your choice in soft pencil on the multiple choice answer sheet.
- Follow the instructions on the multiple choice answer sheet.
- Write in soft pencil.
- Write your name, centre number and candidate number on the multiple choice answer sheet in the spaces provided unless this has been done for you.
- Do **not** use correction fluid.
- Do **not** write on any bar codes.
- You may use a calculator.

INFORMATION

- The total mark for this paper is 40.
- Each correct answer will score one mark.
- Any rough working should be done on this question paper.

This document has **20** pages. Any blank pages are indicated.

© UCLES 2023

Data

acceleration of free fall	$g = 9.81\,\text{m s}^{-2}$
speed of light in free space	$c = 3.00 \times 10^{8}\,\text{m s}^{-1}$
elementary charge	$e = 1.60 \times 10^{-19}\,\text{C}$
unified atomic mass unit	$1\,\text{u} = 1.66 \times 10^{-27}\,\text{kg}$
rest mass of proton	$m_\text{p} = 1.67 \times 10^{-27}\,\text{kg}$
rest mass of electron	$m_\text{e} = 9.11 \times 10^{-31}\,\text{kg}$
Avogadro constant	$N_\text{A} = 6.02 \times 10^{23}\,\text{mol}^{-1}$
molar gas constant	$R = 8.31\,\text{J K}^{-1}\,\text{mol}^{-1}$
Boltzmann constant	$k = 1.38 \times 10^{-23}\,\text{J K}^{-1}$
gravitational constant	$G = 6.67 \times 10^{-11}\,\text{N m}^2\,\text{kg}^{-2}$
permittivity of free space	$\varepsilon_0 = 8.85 \times 10^{-12}\,\text{F m}^{-1}$ $\left(\frac{1}{4\pi\varepsilon_0} = 8.99 \times 10^{9}\,\text{m F}^{-1}\right)$
Planck constant	$h = 6.63 \times 10^{-34}\,\text{J s}$
Stefan–Boltzmann constant	$\sigma = 5.67 \times 10^{-8}\,\text{W m}^{-2}\,\text{K}^{-4}$

Formulae

uniformly accelerated motion	$s = ut + \frac{1}{2}at^2$ $v^2 = u^2 + 2as$
hydrostatic pressure	$\Delta p = \rho g \Delta h$
upthrust	$F = \rho g V$
Doppler effect for sound waves	$f_\text{o} = \frac{f_\text{s} v}{v \pm v_\text{s}}$
electric current	$I = Anvq$
resistors in series	$R = R_1 + R_2 + \ldots$
resistors in parallel	$\frac{1}{R} = \frac{1}{R_1} + \frac{1}{R_2} + \ldots$

© UCLES 2023

1 A stone sinks in water.

What is a possible value for the density of the stone?

A $8 \times 10^2\,\text{kg m}^{-3}$

B $2 \times 10^3\,\text{kg m}^{-3}$

C $8 \times 10^3\,\text{N m}^{-3}$

D $2 \times 10^4\,\text{N m}^{-3}$

2 Gm, Tm, μm and pm are all units of length.

Which unit is the largest and which unit is the smallest?

	largest unit	smallest unit
A	Gm	μm
B	Gm	pm
C	Tm	μm
D	Tm	pm

3 Two measurements for a solid sphere are shown.

$$\text{mass} = (32.5 \pm 0.1)\,\text{g}$$

$$\text{diameter} = (1.87 \pm 0.04)\,\text{cm}$$

These values are used to determine the density of the sphere.

What is the percentage uncertainty in the density?

A 2.4% **B** 4.6% **C** 6.1% **D** 6.7%

© UCLES 2023

4 An aircraft travels along a horizontal path. Two of the forces that act horizontally on the aircraft are the thrust force of the engines and the force due to the wind. The vector diagram for these forces is shown.

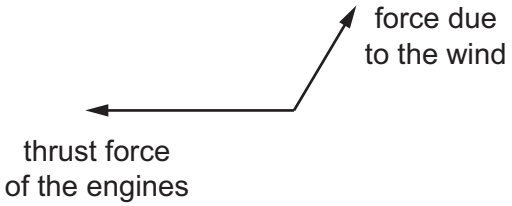

Which vector represents the resultant horizontal force acting on the aircraft due to these two forces?

A



B



C



D

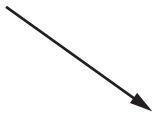

5 A ball travels from point X to point Y around a semicircular track of radius 1.0 m, as shown.

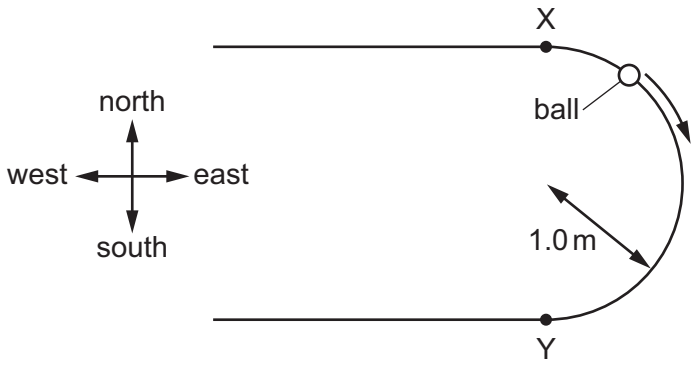

What is the displacement of the ball from X to Y?

A 2.0 m

B 2.0 m due south

C 3.1 m

D 3.1 m due south

© UCLES 2023

6 A rock is launched vertically upwards from the surface of the Earth and an identical rock is launched vertically upwards from the surface of Mars. Each rock is launched with an initial velocity of $12\,m\,s^{-1}$.

Each rock then reaches its maximum height above the surface before returning back down to the surface. The velocity–time graph for each rock is shown. In both cases, air resistance is negligible.

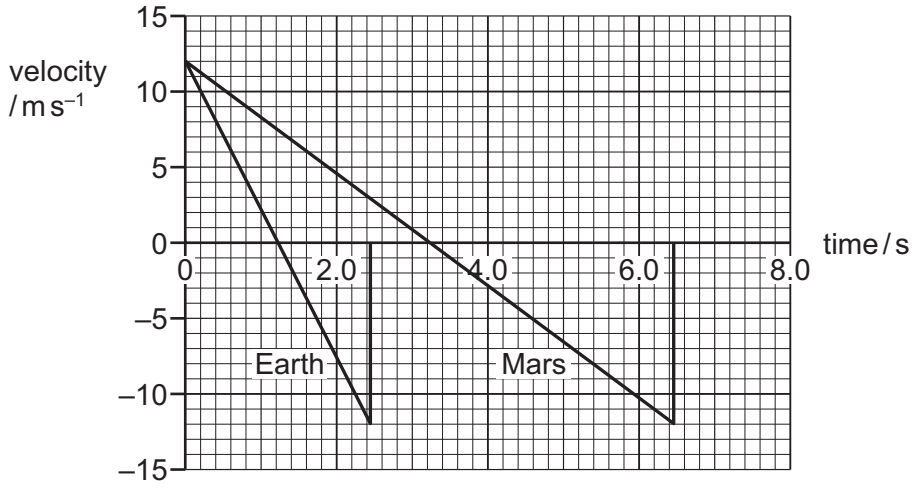

What is the difference in the maximum heights of the two rocks?

A 12 m **B** 15 m **C** 19 m **D** 24 m

7 Which statement describes the mass of an object?

A the force the object experiences due to gravity

B the momentum of the object before a collision

C the resistance of the object to changes in motion

D the weight of the object as measured by a balance

8 A submarine of total mass 3200 kg is at rest underwater.

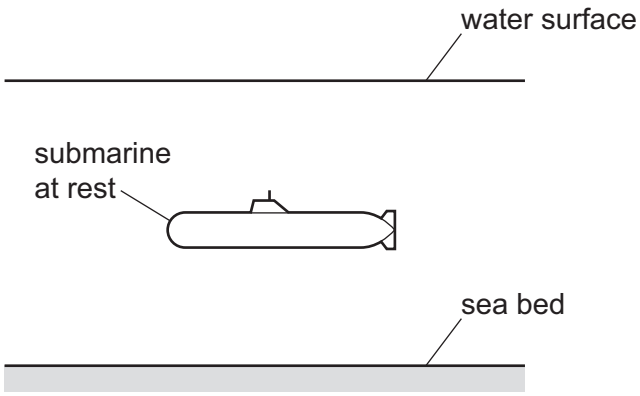

The total mass of the submarine is suddenly decreased by 200 kg by pumping water out of the submarine horizontally in a negligible time. The upthrust acting on the submarine is unchanged.

The change in the total weight of the submarine causes it to accelerate vertically upwards.

What is the initial upwards acceleration of the submarine?

A $0.613\,m\,s^{-2}$ **B** $0.654\,m\,s^{-2}$ **C** $9.81\,m\,s^{-2}$ **D** $10.5\,m\,s^{-2}$

9 A box in air slides with increasing speed down a rough slope from point P to point Q.

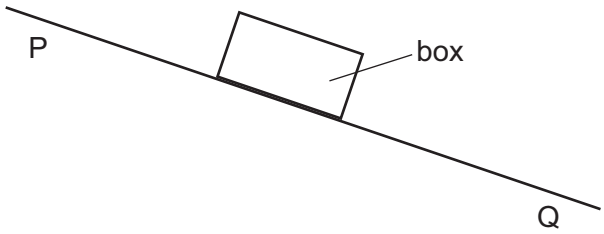

The slope surface exerts a constant frictional force on the box.

As the box moves from P to Q, there are changes to the magnitudes of its acceleration and the total resistive force acting on it.

Which row describes the changes?

	magnitude of acceleration	magnitude of total resistive force
A	increases	decreases
B	decreases	decreases
C	increases	increases
D	decreases	increases

© UCLES 2023

10 Two balls, X and Y, approach each other along the same straight line and collide. The collision is perfectly elastic.

Their initial speeds are u_X and u_Y respectively. After the collision they move apart with speeds v_X and v_Y respectively. Their directions are shown.

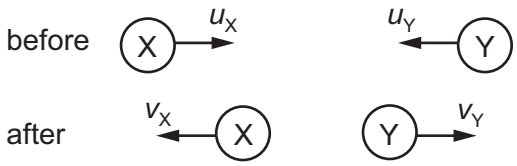

Which equation is correct?

A $u_X + u_Y = v_X + v_Y$

B $u_X + u_Y = v_X - v_Y$

C $u_X - u_Y = v_X + v_Y$

D $u_X - u_Y = v_X - v_Y$

11 A rod is pivoted at point O.

A force F is applied to the rod at point W, as shown.

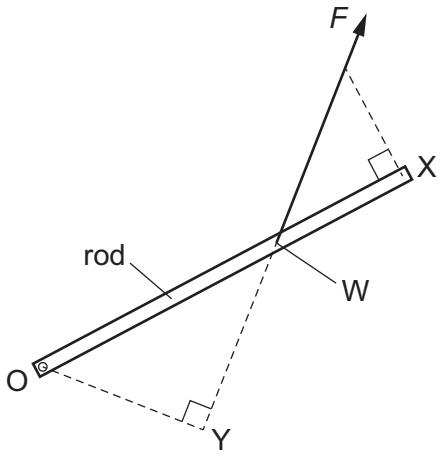

What is the moment of the force F about O?

A $F \times$ distance OX

B $F \times$ distance OY

C $F \times$ distance WO

D $F \times$ distance WX

12 A uniform rod XY of weight 10.0 N is freely hinged to a wall at X. It is held horizontal by a force F acting from Y at an angle of 30° to the horizontal, as shown.

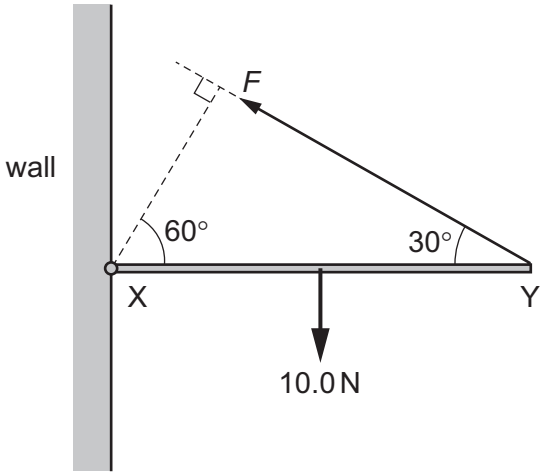

What is the value of F?

A 5.0 N **B** 8.7 N **C** 10 N **D** 20 N

13 Two solid cubes X and Y are made of material of the same density. Cube X has twice the mass of cube Y.

Cube X has sides of length x. Cube Y has sides of length y.

What is the ratio $\frac{x}{y}$?

A 1.26 **B** 1.41 **C** 2.00 **D** 8.00

14 A U-shaped glass tube contains liquid of density 2000 kg m^{-3}, as shown.

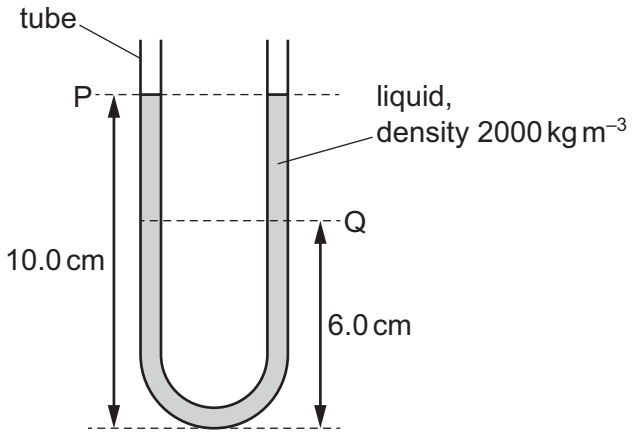

What is the difference in pressure due to the liquid between levels P and Q?

A 780 Pa **B** 1200 Pa **C** 1600 Pa **D** 2000 Pa

© UCLES 2023

15 A steam turbine is used to drive a generator. The input power to the turbine is P_I and the output power is P_O. The power loss in the turbine is P_L, as shown.

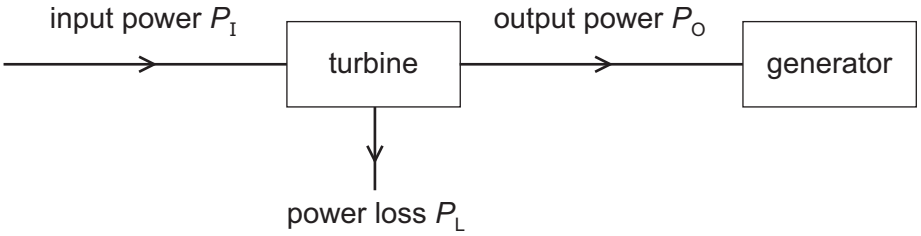

What is the efficiency of the turbine?

A $\frac{P_L}{P_O}$ **B** $\frac{P_I}{P_O}$ **C** $\frac{P_L}{P_I}$ **D** $\frac{P_O}{P_I}$

16 A variable force is applied to ensure that a constant power is supplied to a train.

Which graph best shows the variation of the force F applied with the velocity v of the train?

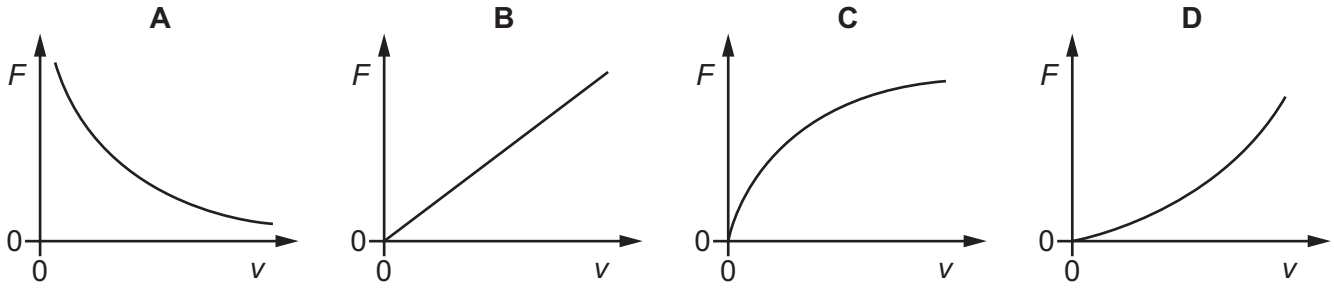

17 A block is released from rest and slides a distance x down a straight slope.

The slope is at an angle θ to the horizontal.

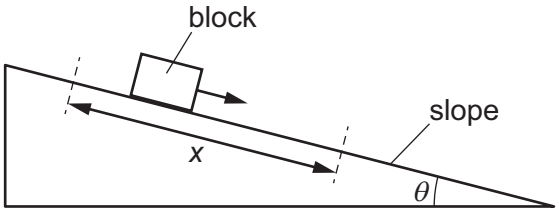

The slope is frictionless and air resistance is negligible.

The acceleration of free fall is g.

Which expression gives the final speed of the block?

A $\sqrt{\frac{gx\sin\theta}{2}}$ **B** $\sqrt{2gx\sin\theta}$ **C** $\sqrt{2gx}$ **D** $2gx\sin\theta$

18 What is meant by the spring constant of a spring?

A extension per unit force

B $\frac{1}{2} \times$ force $\times$ extension

C force $\times$ extension

D force per unit extension

19 A child holds a thin metal wire that is attached to a kite. The graph shows how the extension of the wire varies with its tension.

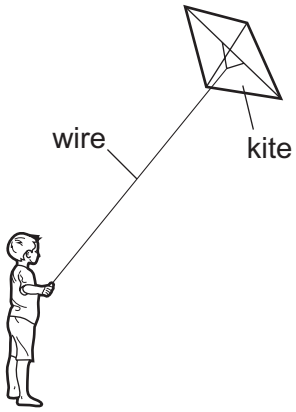

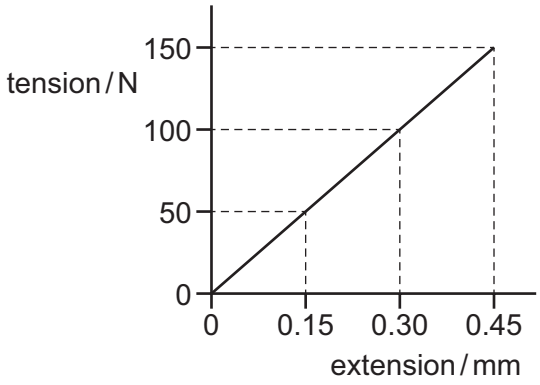

A gust of wind increases the tension from 100 N to 150 N.

What is the change in the elastic potential energy of the wire caused by the gust of wind?

A 3.8 mJ **B** 19 mJ **C** 34 mJ **D** 38 mJ

20 A microphone detects a sound wave. The microphone is connected to a cathode-ray oscilloscope (CRO).

The shape of the trace on the screen of the CRO is shown.

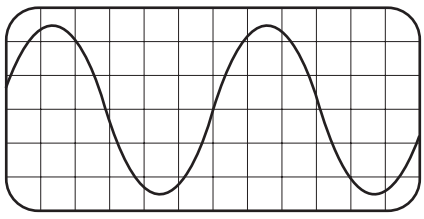

Which property of the sound wave can be determined by using only the measurement of a horizontal distance on the screen and the value of a control setting of the CRO?

A amplitude

B frequency

C speed

D wavelength

© UCLES 2023

21 A longitudinal wave is travelling from left to right. The graph shows the variation of the displacement of the particles with distance along the wave at one instant in time.

Displacements to the right are positive; displacements to the left are negative.

Which labelled point represents a compression?

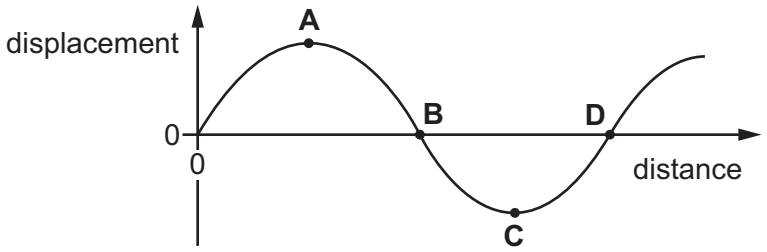

22 A source X emits a sound wave of constant frequency *f*.

The wave is subsequently received at a stationary detector Y.

The frequency of the wave that is detected by Y is less than *f*.

What could be the reason for this?

A Between X and Y, the wave undergoes diffraction.

B Between X and Y, the wave undergoes reflection.

C X is moving away from Y.

D X is moving towards Y.

23 A beam of visible light is in a vacuum.

What could be the frequency of the light?

A 5.0×10^{5} Hz **B** 5.0×10^{8} Hz **C** 5.0×10^{11} Hz **D** 5.0×10^{14} Hz

© UCLES 2023

24 A vertically polarised beam of light of intensity I_0 is incident normally on a polarising filter.

The transmission axis of the filter is at 45° to the vertical. The beam of light transmitted by this filter is then incident normally on a second filter. The transmission axis of the second filter is horizontal.

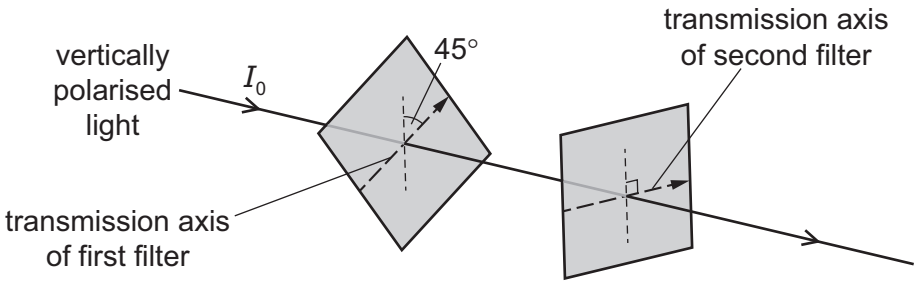

What is the intensity of the beam of light after transmission through the second filter?

A 0 **B** $\frac{1}{4}I_0$ **C** $\frac{1}{2}I_0$ **D** I_0

25 A stationary wave is formed by two progressive waves travelling in opposite directions along the same line of travel.

Which statement about the two progressive waves is **not** correct?

A They must have a constant phase difference.

B They must have the same frequency.

C They must have the same wavelength.

D They must travel at the same speed.

© UCLES 2023

26 The sound from a loudspeaker placed above a tube causes resonance of the air in the tube.

A stationary wave is formed with two nodes and two antinodes, as shown.

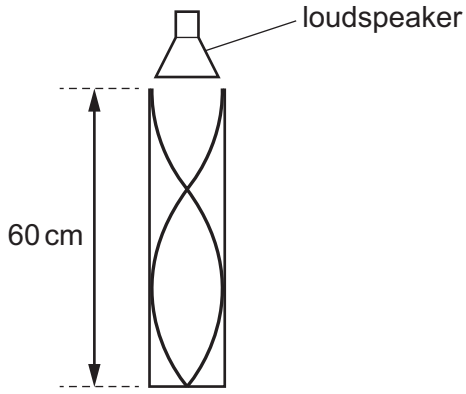

The tube has height 60 cm.

The speed of sound in the air is 340 m s^{-1}.

What is the frequency of the sound?

A 430 Hz **B** 570 Hz **C** 850 Hz **D** 1700 Hz

27 A continuous progressive water wave in a ripple tank passes through a gap in a barrier and diffracts.

The width of the gap is greater than the wavelength of the wave.

Which change causes the wave to spread over a larger angle as it passes through the gap?

A a small decrease in the wavelength of the wave

B a small decrease in the width of the gap

C a small increase in the frequency of the wave

D a small increase in the height of the barrier

© UCLES 2023

28 The diagram shows a view from above of a double-slit interference demonstration.

L is a monochromatic light source with a vertical filament. B is a barrier with two narrow vertical slits and S is a screen upon which interference fringes form.

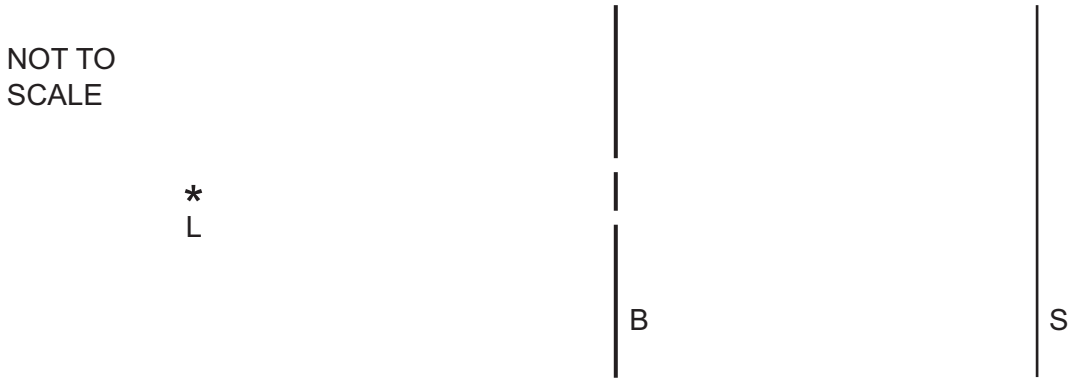

The intensity is I at the point on the screen where the centre of the fringe pattern forms.

When one of the slits is covered, what is the intensity at the same point on the screen?

A $\frac{I}{\sqrt{2}}$ **B** $\frac{I}{2}$ **C** $\frac{I}{2\sqrt{2}}$ **D** $\frac{I}{4}$

29 Green light of wavelength 550 nm is incident normally on a diffraction grating and produces a diffraction pattern on a screen placed 3.5 m from the diffraction grating.

The **third**-order maximum on the screen is a distance of 0.75 m from the zeroth-order (central) maximum.

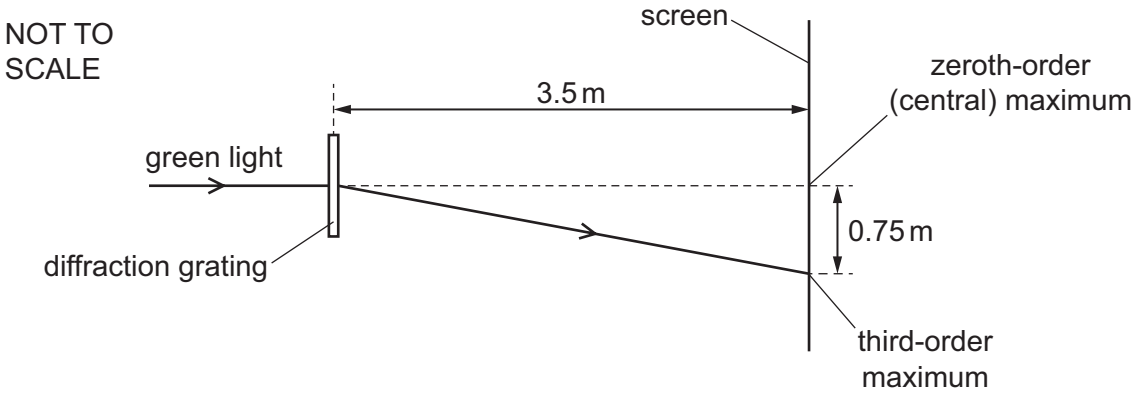

What is the distance between two adjacent slits in the diffraction grating?

A 2.6×10^{-6} m

B 7.7×10^{-6} m

C 7.9×10^{-6} m

D 1.0×10^{-5} m

© UCLES 2023

30 Which charge can be carried by a charge carrier?

A 1.1×10^{-19} C

B 4.0×10^{-19} C

C 4.8×10^{-19} C

D 9.1×10^{-19} C

31 A resistor of resistance R is connected across a cell of electromotive force (e.m.f.) E and negligible internal resistance.

Which single change to the circuit would lead to the largest increase in the power dissipated in the resistor?

A doubling the value of E

B doubling the value of R

C halving the value of E

D halving the value of R

32 An electrical cable is made up of one thick strand of copper wire that is surrounded by eight thin strands of copper wire. All nine strands of wire are connected in parallel with each other.

A cross-section of the cable is shown.

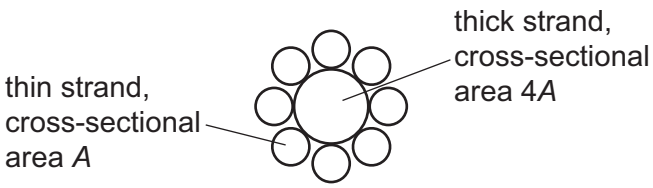

Each thin strand of wire has cross-sectional area A and length L.

The thick strand of wire has cross-sectional area $4A$ and length L.

The cable has total resistance R.

Which expression gives the resistivity of copper?

A $\frac{4A}{33RL}$ **B** $\frac{12A}{RL}$ **C** $\frac{4AR}{L}$ **D** $\frac{12AR}{L}$

33 A car has sensors for detecting the light intensity and temperature of its environment.

The sensors make use of a light-dependent resistor (LDR) and a thermistor.

The car moves from a warm and dark environment into a cold and bright environment.

What are the changes to the resistances of the LDR and thermistor?

	resistance of LDR	resistance of thermistor
A	increases	increases
B	increases	decreases
C	decreases	increases
D	decreases	decreases

34 A student assembles the circuit shown.

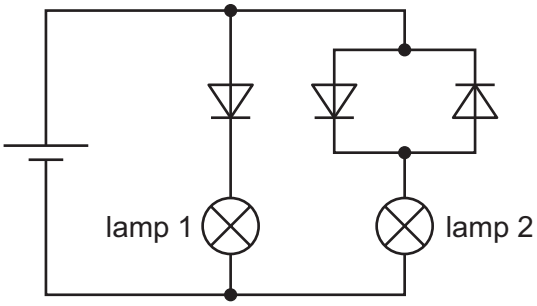

Which row describes the state of the two lamps?

	lamp 1	lamp 2
A	off	off
B	on	off
C	off	on
D	on	on

35 Kirchhoff's first law is a consequence of the conservation of which quantity?

A charge

B energy

C momentum

D potential difference

© UCLES 2023

36 Three identical cells each have electromotive force (e.m.f.) E and negligible internal resistance. The cells are connected to three identical resistors, each of resistance R, as shown.

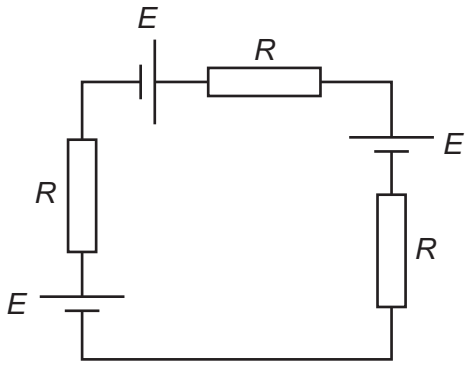

What is the potential difference across one of the resistors?

A 0 **B** $\frac{E}{3}$ **C** $\frac{2E}{3}$ **D** E

37 In the potentiometer circuit shown, the reading on the ammeter is zero.

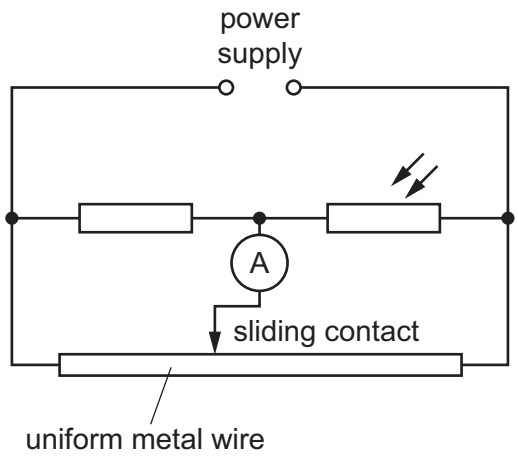

The light-dependent resistor (LDR) is then covered and the ammeter gives a non-zero reading.

Which change could return the ammeter reading to zero?

A decreasing the supply voltage

B increasing the supply voltage

C moving the sliding contact to the left

D moving the sliding contact to the right

© UCLES 2023

38 What are isotopes?

A nuclei of different elements with the same number of neutrons

B nuclei of different elements with the same number of nucleons

C nuclei of the same element with different numbers of neutrons

D nuclei of the same element with different numbers of protons

39 A neutron ${}^{1}_{0}\text{n}$ is fired at a ${}^{235}_{92}\text{U}$ nucleus. The neutron is absorbed by the nucleus which then splits to form nuclei of ${}^{141}_{56}\text{Ba}$ and ${}^{92}_{36}\text{Kr}$.

What is the number of free neutrons emitted when the ${}^{235}_{92}\text{U}$ nucleus splits?

A 0 **B** 1 **C** 2 **D** 3

40 A π^+ meson has a charge of $+e$, where e is the elementary charge. It consists of an up quark and one other quark.

What could be the other quark in the π^+ meson?

A anti-down

B anti-up

C bottom

D charm

© UCLES 2023

BLANK PAGE

BLANK PAGE

Permission to reproduce items where third-party owned material protected by copyright is included has been sought and cleared where possible. Every reasonable effort has been made by the publisher (UCLES) to trace copyright holders, but if any items requiring clearance have unwittingly been included, the publisher will be pleased to make amends at the earliest possible opportunity.

To avoid the issue of disclosure of answer-related information to candidates, all copyright acknowledgements are reproduced online in the Cambridge Assessment International Education Copyright Acknowledgements Booklet. This is produced for each series of examinations and is freely available to download at www.cambridgeinternational.org after the live examination series.

Cambridge Assessment International Education is part of Cambridge Assessment. Cambridge Assessment is the brand name of the University of Cambridge Local Examinations Syndicate (UCLES), which is a department of the University of Cambridge.

© UCLES 2023